SGO (Boss Slow Gear SG-1™ Replica) Schematic excluding Boss-type bypass switch Wiring

Version 2006August05

Copyright 2006 JD Sleep
Permission refused for posting/serving this file from any site other than www.generalguitargadgets.com
Trademarks are property of their owners

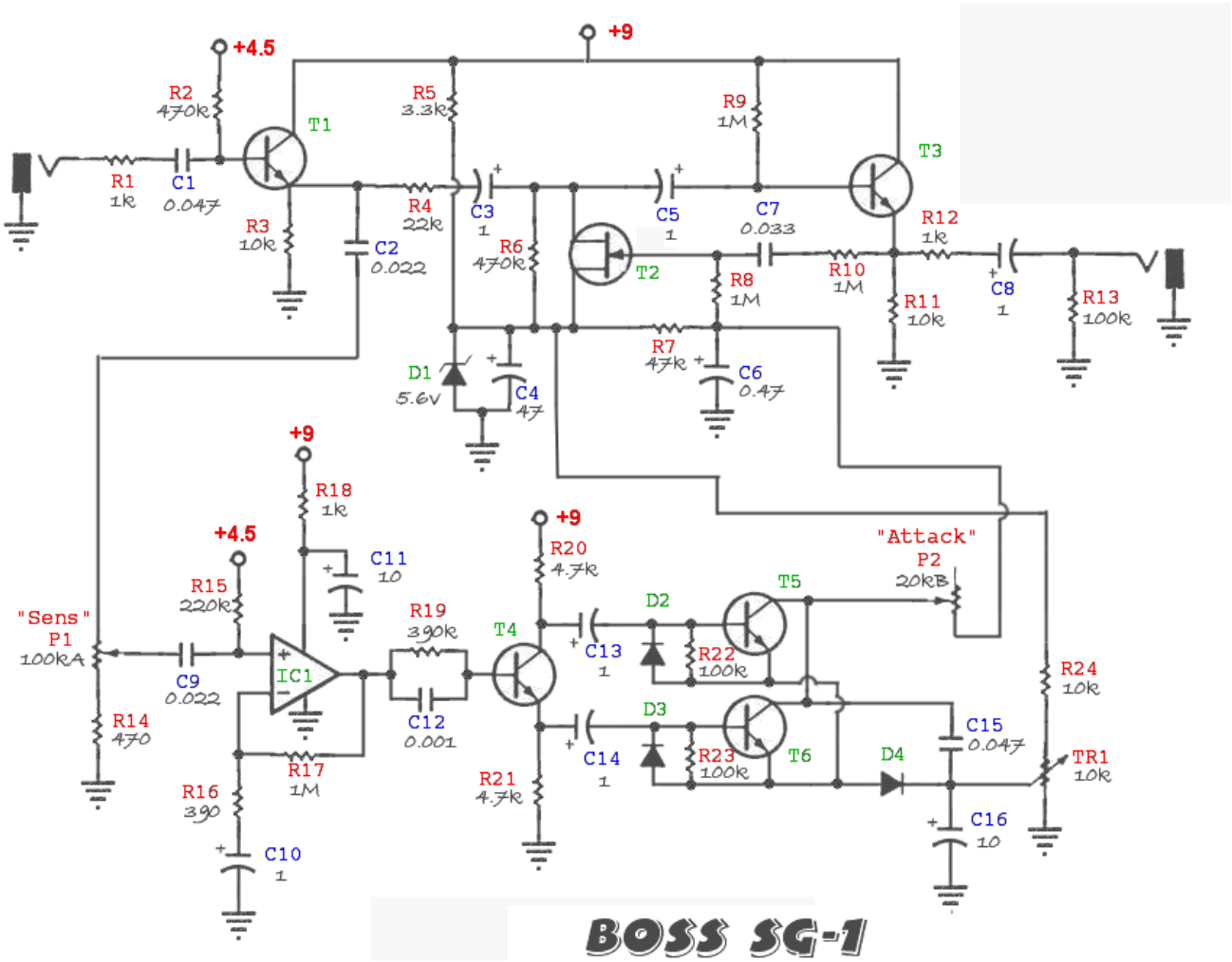

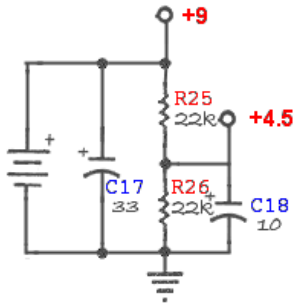

BOSS SG-1 SLOW GEAR

All transistors except T2 are BC549
T2 is 2SK30A N-FET
All diodes except D1 are 1N4148
D1 is 5.6V zener
All capacitors in uF

Copyright of this artwork Alex Petrini