Weslie (Sort of Leslie Simulator)

Schematic

Version 2014February20

Copyright 2014 JD Sleep
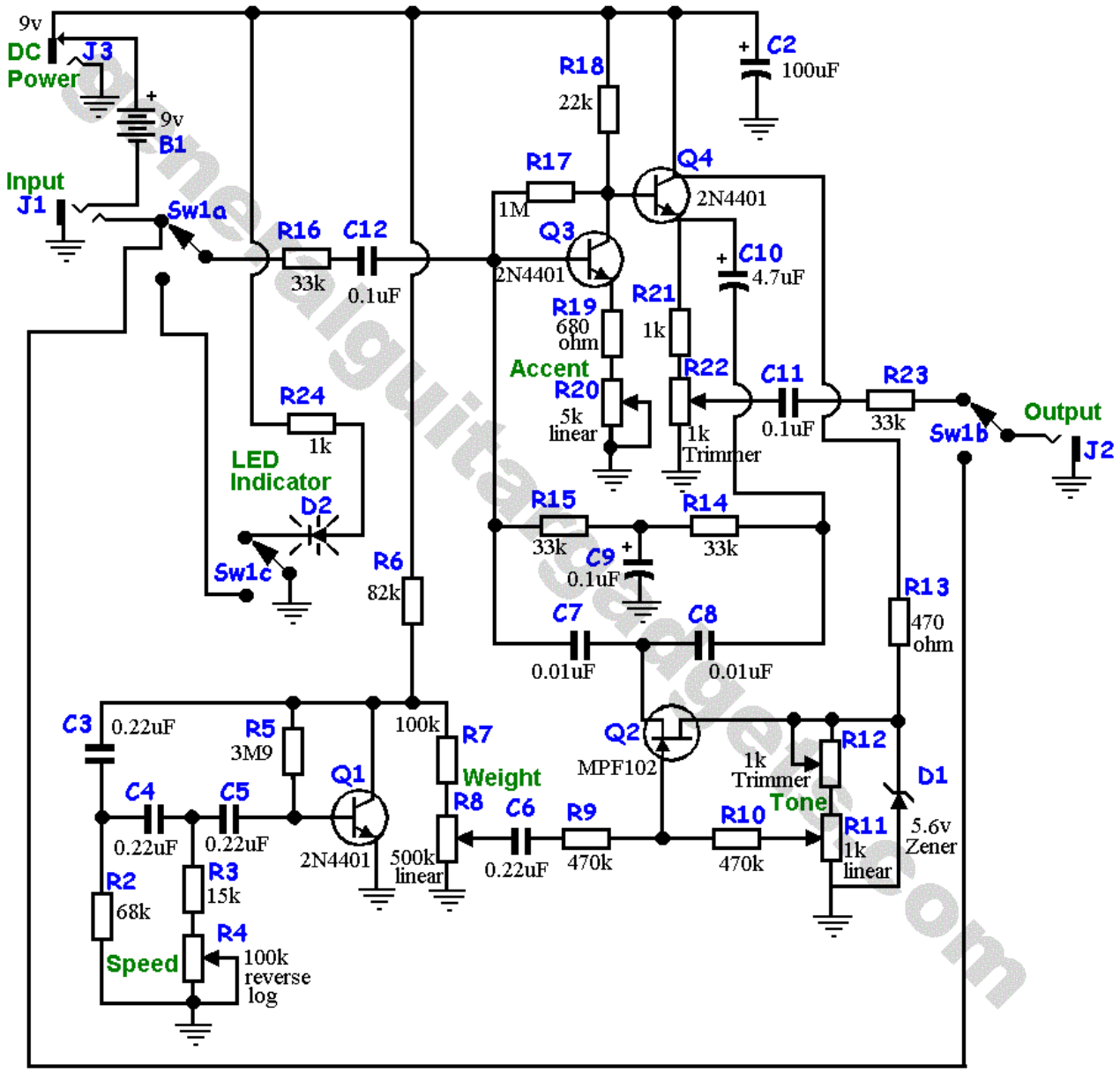
Permission refused for posting/serving this file from any site other than www.generalguitargadgets.com Trademarks are property of their owners