ToneBender™ (3-Knob) Replica
NPN Germanium Transistor Negative Ground Version

Version 2013July08

Copyright 2012 JD Sleep

Permission refused for posting/serving this file from any site other than www.generalguitargadgets.com Trademarks are property of their owners

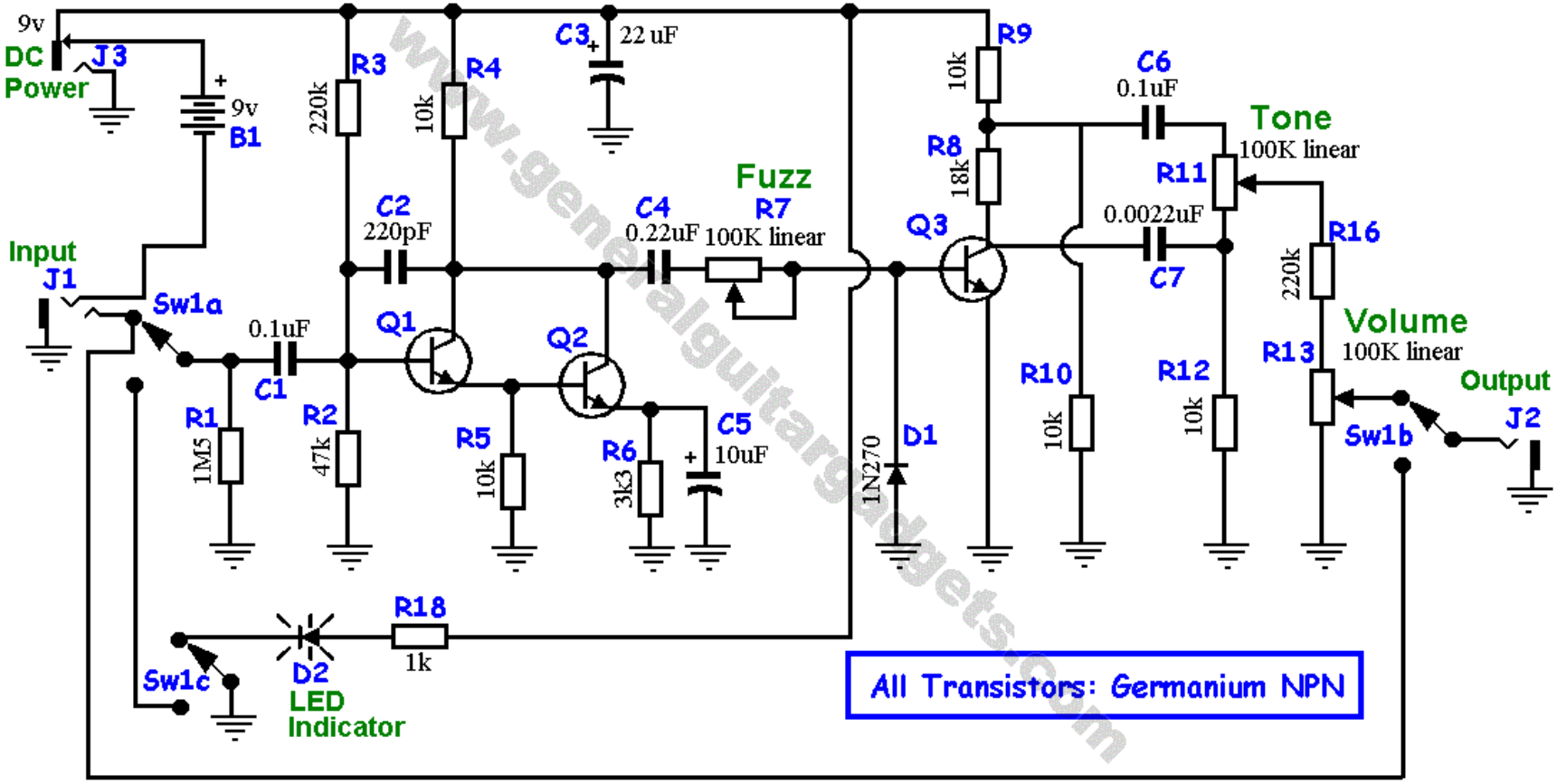

www.generalguitargadgets.com