Guild™ Foxey Lady
Part Layout

Version 2012December23
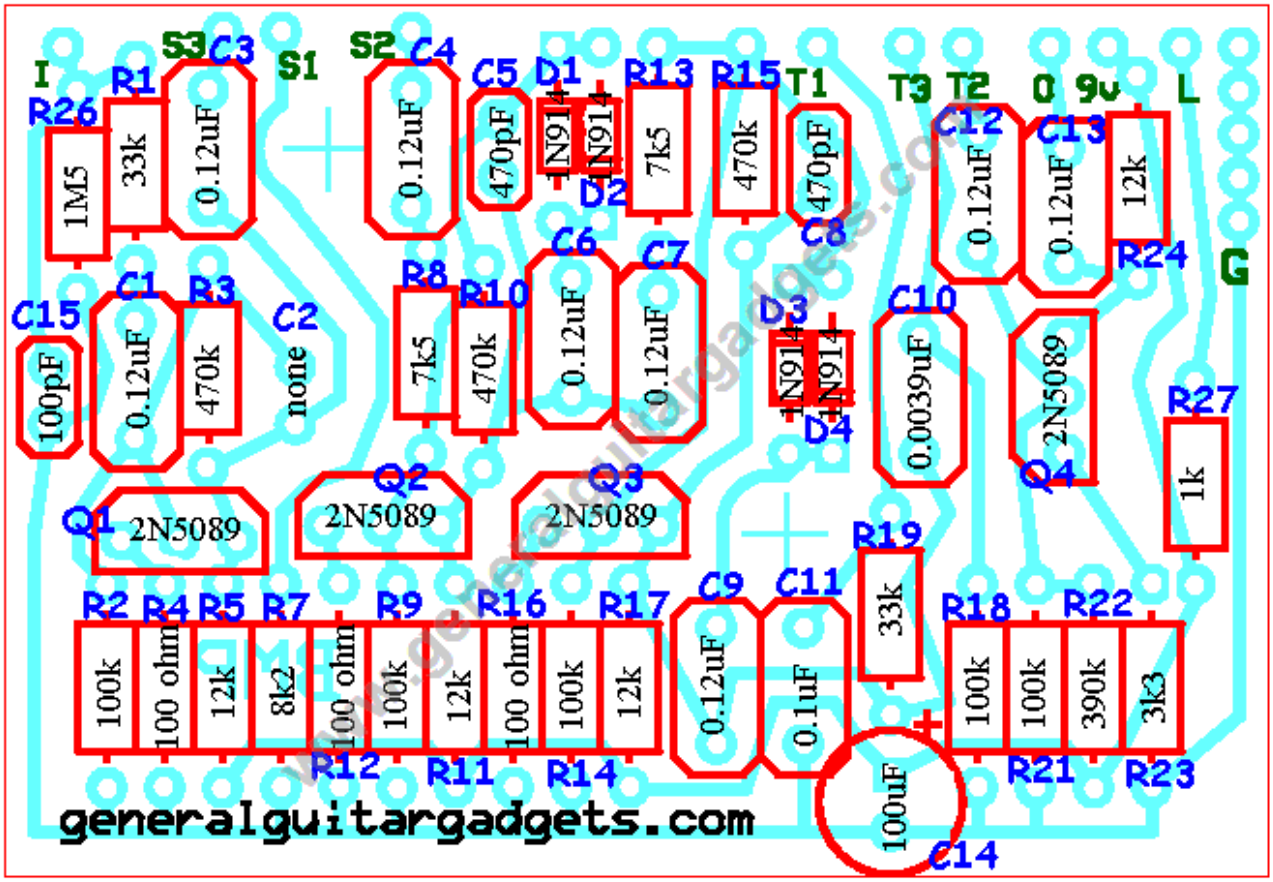
Copyright 2012 JD Sleep
Permission refused for posting/serving this file from any site other than www.generalguitargadgets.com
Trademarks are property of their owners