Tim Escobedo's Bronx Cheer Filter

Version 2014July29

Copyright 2014 JD Sleep
Permission refused for posting/serving this file from any site other than www.generalguitargadgets.com
Trademarks are property of their owners

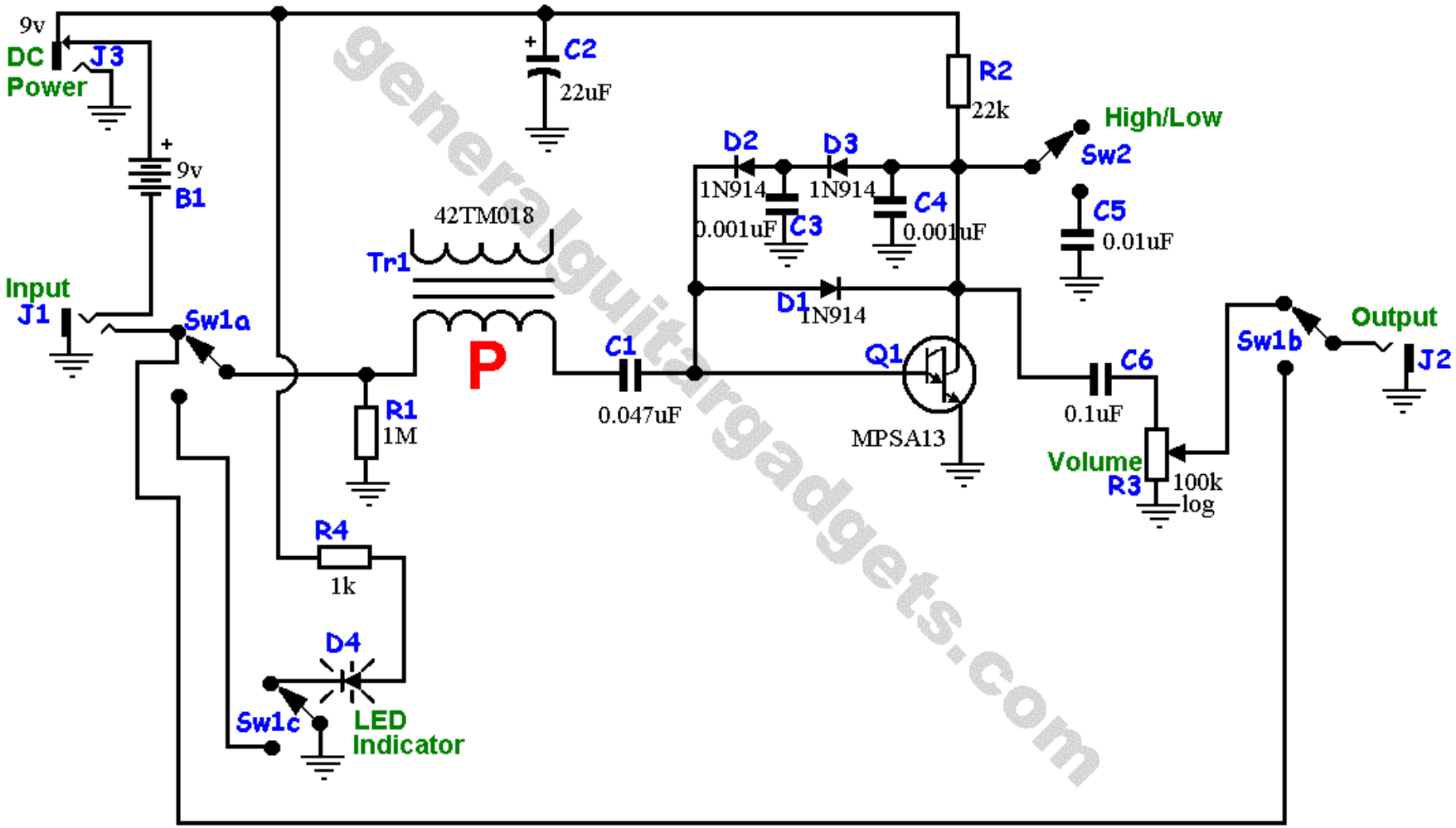

generalguitargadgets.com