Ampeg™ Scrambler™ Replica (with Volume Control)

Version 2017April25

Copyright 2017 JD Sleep

Permission refused for posting/serving this file from any site other than www.generalguitargadgets.com *Trademarks are property of their owners*

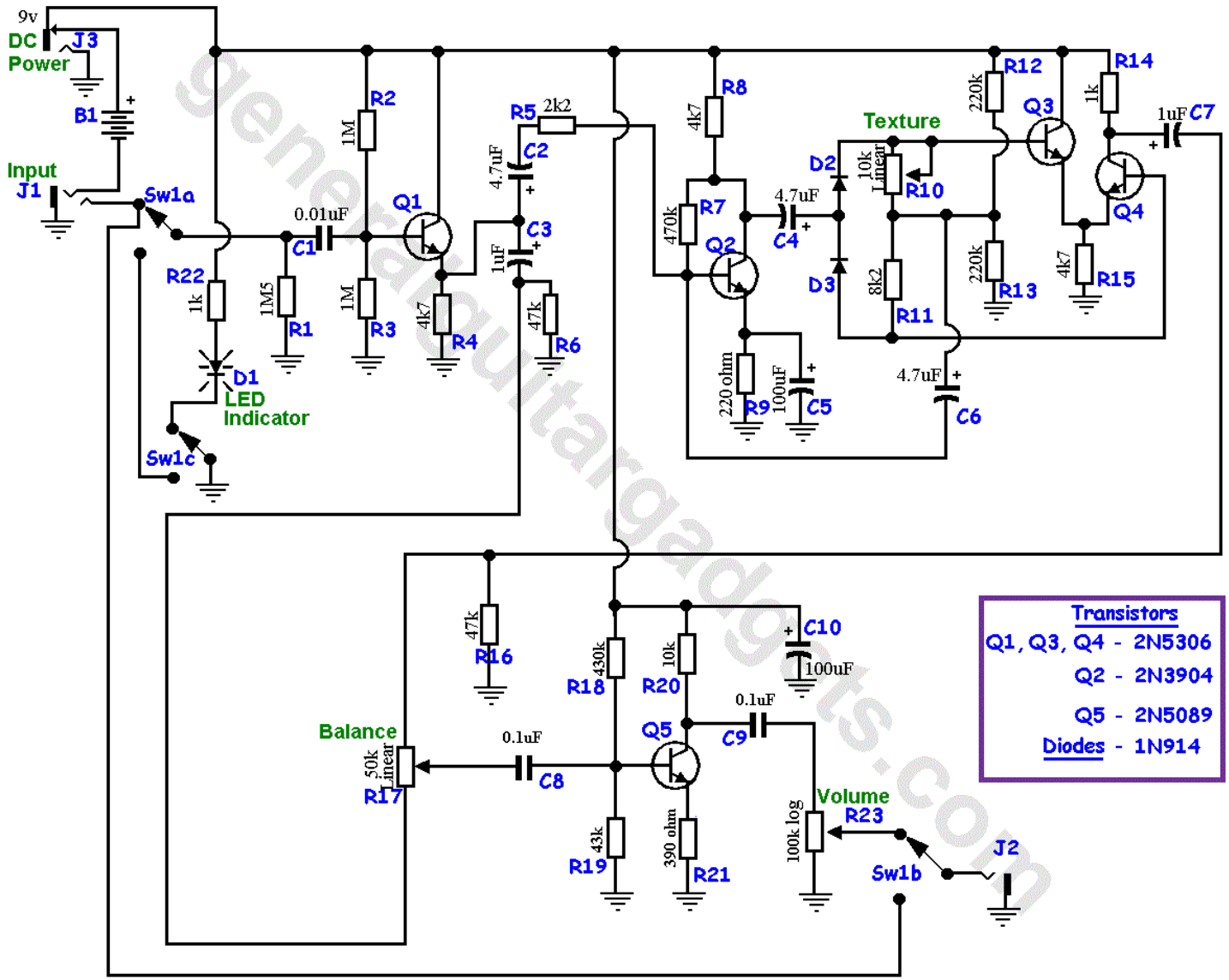

generalguitargadgets.com