Fuzz Face™ (Boutique Late 60's)

Version 2014November19
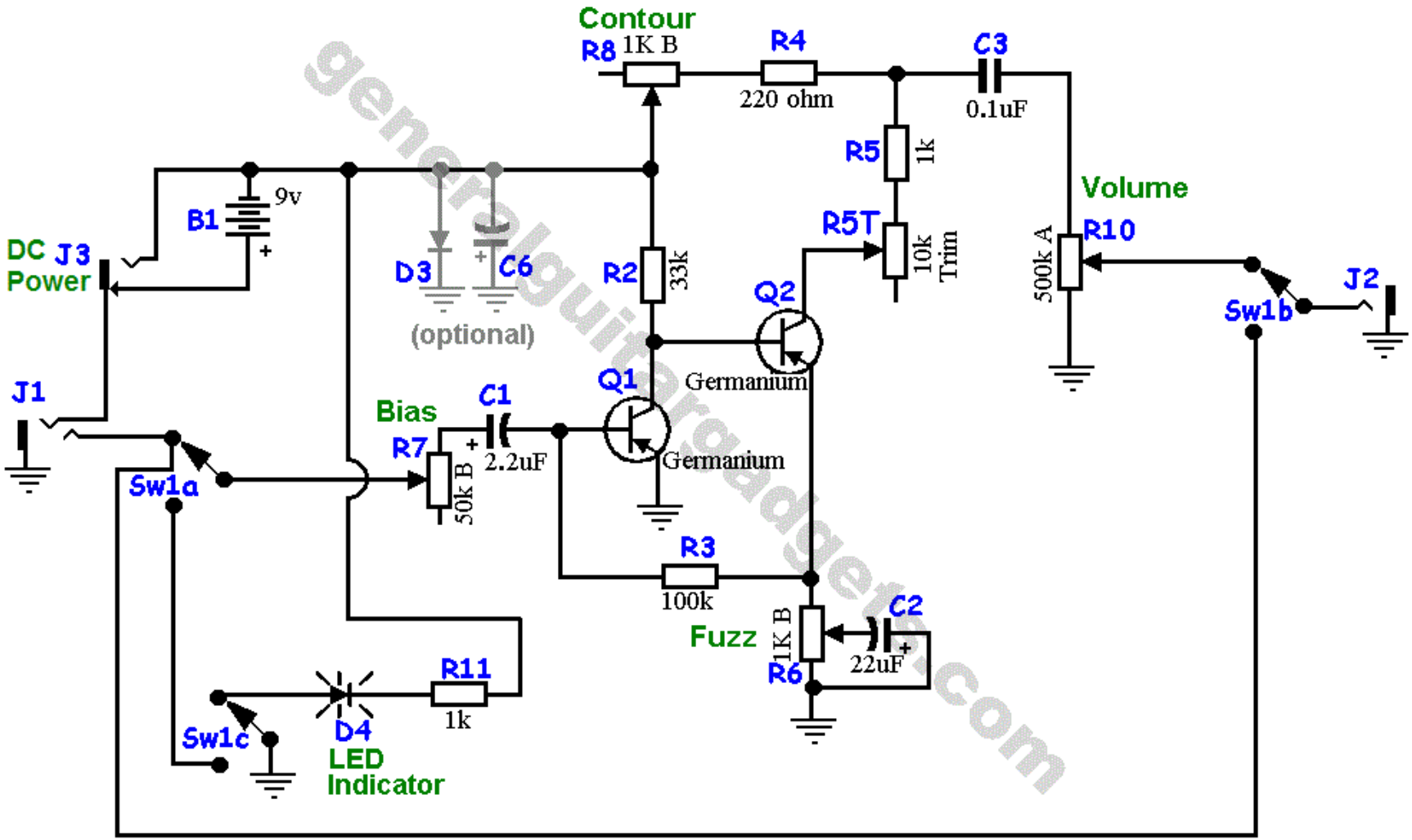
Copyright 2007 – 2014 JD Sleep
Permission refused for posting/serving this file from any site other than www.generalguitargadgets.com Trademarks are property of their owners