Graphic Equalizer (5 Band With Gain Knob) Wiring Diagram

Version 2007May08

Copyright 2007 JD Sleep

Permission refused for posting/serving this file from any site other than www.generalguitargadgets.com

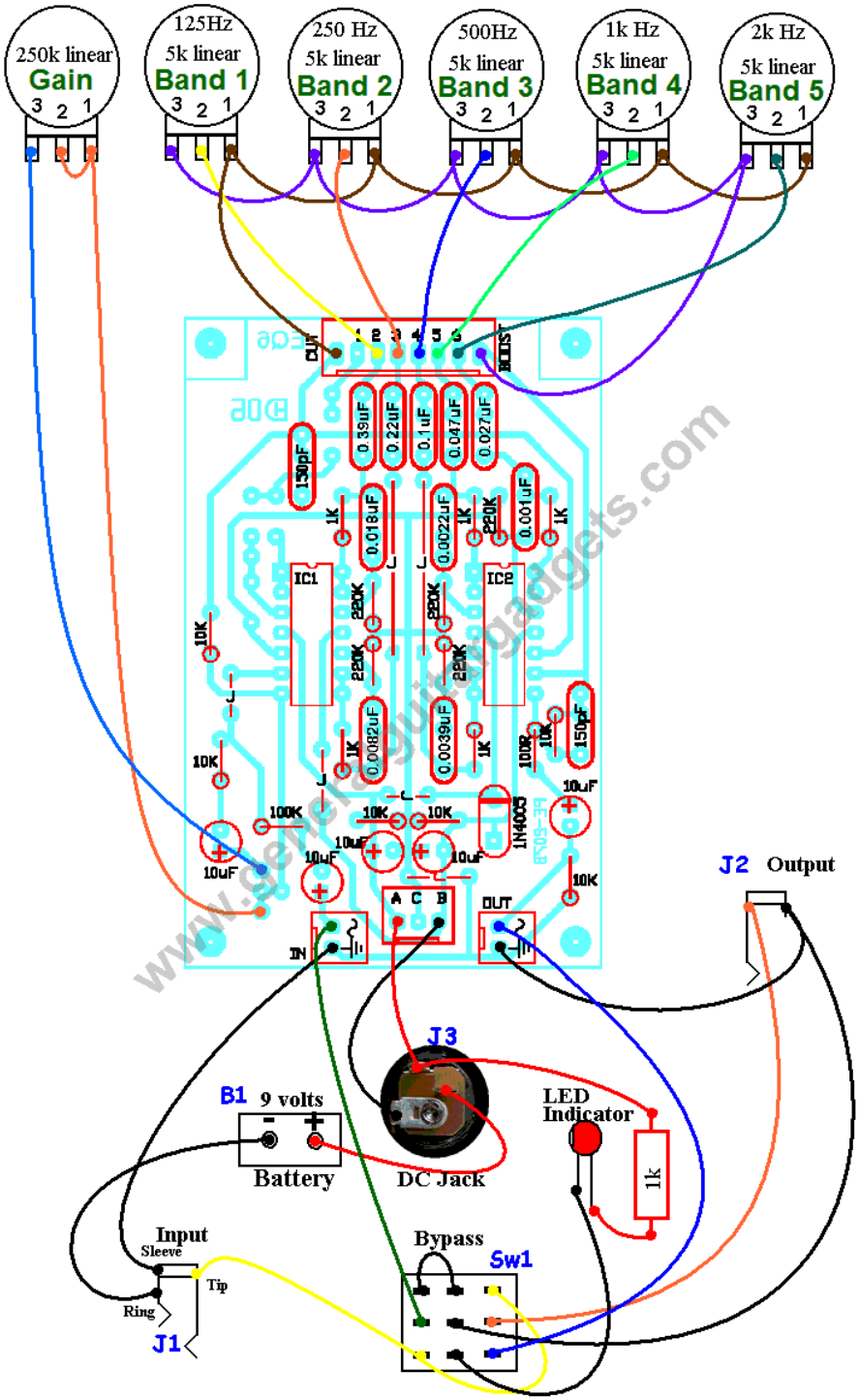

www.generalguitargadgets.com